DTC	P0171	System Too Lean (Bank 1)

DTC	P0172	System Too Rich (Bank 1)

DESCRIPTION

The fuel trim is related to the feedback compensation value, not to the basic injection time. The fuel trim consists of both the short-term and long-term fuel trims.
The short-term fuel trim is fuel compensation that is used to constantly maintain the air-fuel ratio at stoichiometric levels. The signal from the Air-fuel Ratio (A/F) sensor indicates whether the air-fuel ratio is rich or lean compared to the stoichiometric ratio. This triggers a reduction in the fuel injection volume if the air-fuel ratio is rich and an increase in the fuel injection volume if it is lean.
Factors such as individual engine differences, wear over time and changes in operating environment cause short-term fuel trim to vary from the central value. The long-term fuel trim, which controls overall fuel compensation, compensates for long-term deviations in the fuel trim from the central value caused by the short-term fuel trim compensation.
If both the short-term and long-term fuel trims are lean or rich beyond predetermined values, it is interpreted as a malfunction, and the ECM illuminates the MIL and sets a DTC.

DTC No.	DTC Detection Conditions	Trouble Areas
P0171	With warm engine and stable air-fuel ratio feedback, fuel trim considerably in error to lean side (2 trip detection logic)	• Air induction system • Injector blockage • Mass Air Flow (MAF) meter • Engine Coolant Temperature (ECT) sensor • Fuel pressure • Gas leakage from exhaust system • Open or short in A/F sensor (sensor 1) circuit • A/F sensor (sensor 1) • A/F sensor heater (sensor 1) • EFI relay • A/F sensor heater and EFI relay circuits • PCV valve and hose • PCV hose connections • ECM
P0172	With warm engine and stable air-fuel ratio feedback, fuel trim considerably in error to rich side (2 trip detection logic)	• Injector leakage or blockage • MAF meter • ECT sensor • Ignition system • Fuel pressure • Gas leakage from exhaust system • Open or short in A/F sensor (sensor 1) circuit • A/F sensor (sensor 1) • A/F sensor heater (sensor 1) • EFI relay • A/F sensor heater and EFI relay circuits • ECM

HINT:
- When DTC P0171 is set, the actual air-fuel ratio is on the lean side. When DTC P0172 is set, the actual air-fuel ratio is on the rich side.
- If the vehicle runs out of fuel, the air-fuel ratio is lean and DTC P0171 may be set. The MIL is then illuminated.
- When the total of the short-term and long-term fuel trim values is within the malfunction threshold (and the engine coolant temperature is more than 75°C [167°F]), the system is functioning normally.

cardiagn.com

MONITOR DESCRIPTION

Under closed-loop fuel control, fuel injection volumes that deviate from those estimated by the ECM cause changes in the long-term fuel trim compensation value. The long-term fuel trim is adjusted when there are persistent deviations in the short-term fuel trim values. Deviations from the ECM's estimated fuel injection volumes also affect the average fuel trim learning value, which is a combination of the average short-term fuel trim (fuel feedback compensation value) and the average long-term fuel trim (learning value of the air-fuel ratio). If the average fuel trim learning value exceeds the malfunction thresholds, the ECM interprets this as a fault in the fuel system and sets a DTC.
Example:
The average fuel trim leaning value is more than +35 % or less than -35 %, the ECM interprets this as a fuel system malfunction.

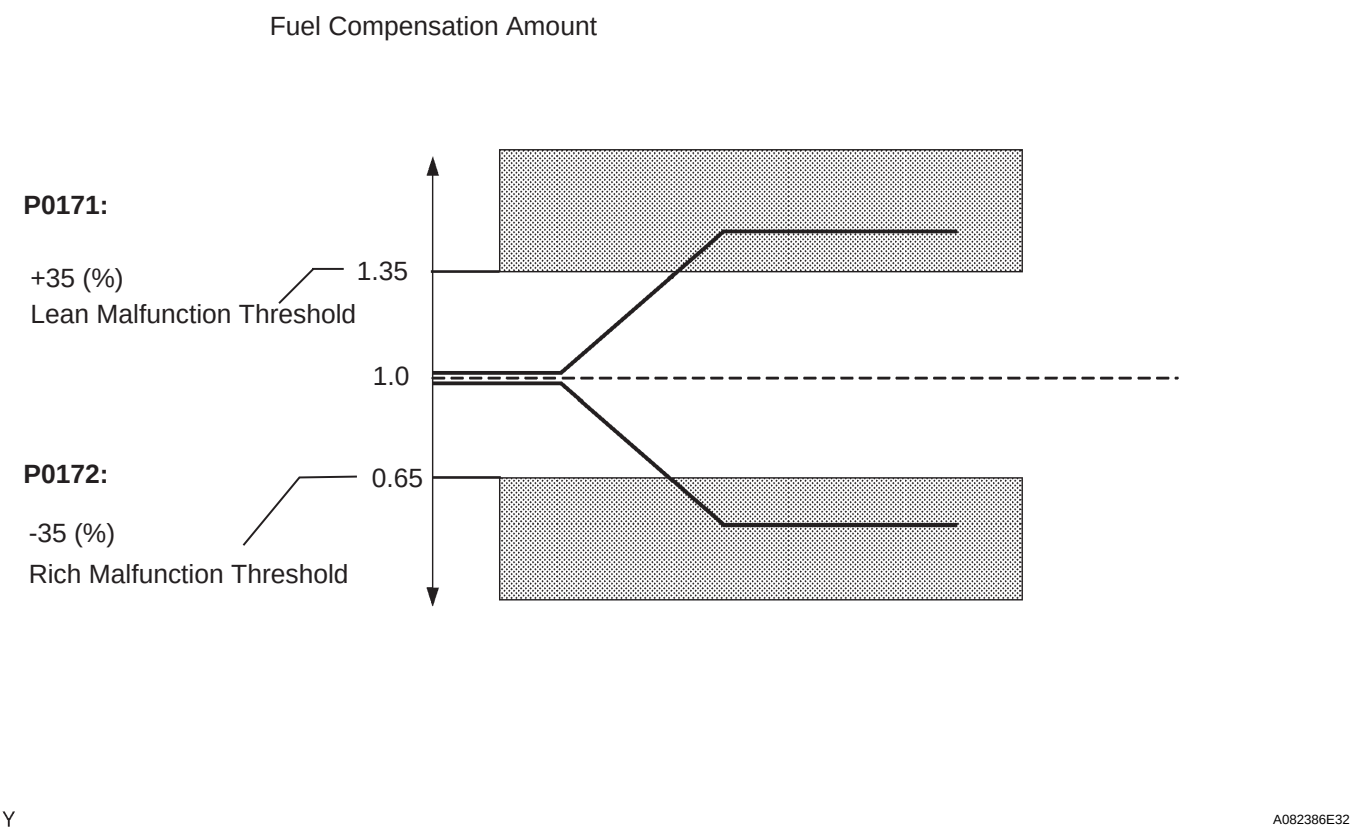

MONITOR STRATEGY

Related DTCs	P0171: Fuel trim Lean P0172: Fuel trim Rich
Required Sensors/Components (Main)	Fuel system
Required Sensors/Components (Related)	Air-fuel ratio sensor, Mass air flow meter, Crankshaft position sensor
Frequency of Operation	Continuous
Duration	Within 10 seconds
MIL Operation	2 driving cycles
Sequence of Operation	None

cardiagn.com

TYPICAL ENABLING CONDITIONS

Fuel-trim:

The monitor will run whenever the following DTCs are not present	P0010 (VVT VSV), P0011, P0012 (VVT system-Advance, Retard), P0031, P0032 (O2 sensor heater sensor 1), P0031, P0032 (A/F sensor heater sensor 1), P0100, P0102, P0103 (MAF sensor), P0115, P0117, P0118 (ECT sensor), P0120, P0122, P0123, P220, P0222, P0223, P2135 (TP sensor), P0125 (Insufficient ECT for closed loop), P0335 (CKP sensor), P0340, P0341 (CMP sensor), P0351, P0352, P0353, P0354 (Igniter), P0500 (VSS)
Fuel system status	Closed-loop for more than 13 seconds
Battery voltage	11 V or more
Throttle position learning	Completed
Either of following conditions A or B set	-
A. Engine RPM	Less than 1,100 rpm
B. Intake air amount per revolution	0.14 g/rev or more
Catalyst monitor	Not executed

ES

TYPICAL MALFUNCTION THRESHOLDS

Fuel-trim:

Either of the following conditions is met:	Condition 1 or 2
1. Average between short-term fuel trim and long-term fuel trim	35 % or more (varies with ECT)
2. Average between short-term fuel trim and long-term fuel trim	-35 % or less (varies with ECT)

WIRING DIAGRAM

Refer to DTC P2195 (See page ES-296).

INSPECTION PROCEDURE

HINT:

Intelligent tester only:

Malfunctioning areas can be identified by performing the A/F CONTROL function provided in the ACTIVE TEST. The A/F CONTROL function can help to determine whether the Air-Fuel Ratio (A/F) sensor, Heated Oxygen (HO2) sensor and other potential trouble areas are malfunctioning.

The following instructions describe how to conduct the A/F CONTROL operation using an intelligent tester.

1. Connect an intelligent tester to the DLC3.
2. Start the engine and turn the tester ON.
3. Warm up the engine at an engine speed of 2,500 rpm for approximately 90 seconds.
4. On the tester, select the following menu items: DIAGNOSIS / ENHANCED OBD II / ACTIVE TEST / A/F CONTROL.
5. Perform the A/F CONTROL operation with the engine in an idling condition (press the RIGHT or LEFT button to change the fuel injection volume).
6. Monitor the voltage output of the A/F and HO2 sensors (AFS B1S1 and OS2 B1S2) displayed on the tester.

HINT:

- The A/F CONTROL operation lowers the fuel injection volume by 12.5 % or increases the injection volume by 25 %.
- Each sensor reacts in accordance with increases and decreases in the fuel injection volume.

Standard voltage

Tester Display (Sensor)	Injection Volumes	Status	Voltages
AFS B1S1 (A/F)	**+25 %**	**Rich**	**Less than 3.0**
AFS B1S1 (A/F)	**-12.5 %**	**Lean**	**More than 3.35**

cardiagn.com

Tester Display (Sensor)	Injection Volumes	Status	Voltages
O2S B1S2 (HO2)	+25 %	Rich	More than 0.55
O2S B1S2 (HO2)	-12.5 %	Lean	Less than 0.4

NOTICE:
The Air-Fuel Ratio (A/F) sensor has an output delay of a few seconds and the Heated Oxygen (HO2) sensor has a maximum output delay of approximately 20 seconds.

Case	A/F Sensor (Sensor 1) Output Voltage		HO2 Sensor (Sensor 2) Output Voltage		Main Suspected Trouble Area
Case 1	Injection Volume +25 % -12.5 %		Injection Volume +25 % -12.5 %		-
	Output Voltage More than 3.35 V Less than 3.0 V	OK	Output Voltage More than 0.55 V Less than 0.4 V	OK	
Case 2	Injection Volume +25 % -12.5 %		Injection Volume +25 % -12.5 %		• A/F sensor • A/F sensor heater • A/F sensor circuit
	Output Voltage Almost no reaction	NG	Output Voltage More than 0.55 V Less than 0.4 V	OK	
Case 3	Injection Volume +25 % -12.5 %		Injection Volume +25 % -12.5 %		• HO2 sensor • HO2 sensor heater • HO2 sensor circuit
	Output Voltage More than 3.35 V Less than 3.0 V	OK	Output Voltage Almost no reaction	NG	
Case 4	Injection volume +25 % -12.5 %		Injection Volume +25 % -12.5 %		• Injector • Fuel pressure • Gas leakage from exhaust system (Air-fuel ratio extremely rich or lean)
	Output Voltage Almost no reaction	NG	Output Voltage Almost no reaction	NG	

HINT:
- Following the A/F CONTROL procedure enables technicians to check and graph the voltage outputs of both the A/F and HO2 sensors.
- To display the graph, select the following menu items on the tester: DIAGNOSIS / ENHANCED OBD II / ACTIVE TEST/ A/F CONTROL / USER DATA / AFS B1S1 and O2S B1B2, and press the YES button and then the ENTER button followed by the F4 button.
- Read freeze frame data using an intelligent tester or OBD II scan tool. The ECM records vehicle and driving condition information as freeze frame data the moment a DTC is stored. When troubleshooting, freeze frame data can be helpful in determining whether the vehicle was running or stopped, whether the engine was warmed up or not, whether the air/fuel ratio was lean or rich, as well as other data recorded at the time of a malfunction.
- A low A/F sensor voltage could be caused by a rich air-fuel mixture. Check for conditions that would cause the engine to run rich.
- A high A/F sensor voltage could be caused by a lean air-fuel mixture. Check for conditions that would cause the engine to run lean.

cardiagn.com

When using intelligent tester:

1	CHECK ANY OTHER DTCS OUTPUT (IN ADDITION TO DTC P0171 OR P0172)

(a) Connect an intelligent tester to the DLC3.
(b) Turn the ignition switch to ON and turn the tester ON.
(c) Select the following menu items: DIAGNOSIS / ENHANCED OBD II / DTC INFO / CURRENT CODES.
(d) Read DTCs.

Result

Display (DTC Output)	Proceed to
P0171 or P0172	A
P0171 or P0172 and other DTCs	B

HINT:
If any DTCs other than P0171 or P0172 are output, troubleshoot those DTCs first.

B → **GO TO DTC CHART**

A

2	CHECK PCV HOSE (CONNECTIONS)

OK:
PCV hose is connected correctly, and is not damaged.

NG → **REPAIR OR REPLACE PCV HOSE**

OK

3	CHECK AIR INDUCTION SYSTEM

(a) Check the air induction system for vacuum leakage.
OK:
No leakage from air induction system.

NG → **REPAIR OR REPLACE AIR INDUCTION SYSTEM**

OK

4	PERFORM ACTIVE TEST BY INTELLIGENT TESTER (A/F CONTROL)

(a) Connect the intelligent tester to the DLC3.
(b) Start the engine and turn the tester ON.
(c) Warm up the engine at an engine speed of 2,500 rpm for approximately 90 seconds.
(d) On the tester, select the following menu items: DIAGNOSIS / ENHANCED OBD II / ACTIVE TEST / A/F CONTROL.

cardiagn.com

(e) Perform the A/F CONTROL operation with the engine in an idling condition (press the RIGHT or LEFT button to change the fuel injection volume).
(f) Monitor the voltage outputs of the A/F and HOS sensors (AFS B1S1 and O2S B1S2) displayed on the tester.

HINT:
- The A/F CONTROL operation lowers the fuel injection volume by 12.5 % or increases the injection volume by 25 %.
- Each sensor reacts in accordance with increases and decreases in the fuel injection volume.

Standard voltage

Tester Display (Sensor)	Injection Volumes	Status	Voltages
AFS B1S1 (A/F)	+25 %	Rich	Less than 3.0
AFS B1S1 (A/F)	-12.5 %	Lean	More than 3.35
O2S B1S2 (HO2)	+25 %	Rich	More than 0.55
O2S B1S2 (HO2)	-12.5 %	Lean	Less than 0.4

Result

Status AFS B1S1	Status O2S B1S2	A/F Condition and A/F Sensor Condition	Misfires	Suspected Trouble Areas	Proceed to
Lean/Rich	Lean/Rich	Normal	-	-	C
Lean	Lean	Actual air-fuel ratio lean	May occur	• PCV valve and hose • PCV hose connections • Injector blockage • Gas leakage from exhaust system • Air induction system • Fuel pressure • Mass Air Flow (MAF) meter • Engine Coolant Temperature (ECT) sensor	A
Rich	Rich	Actual air-fuel ratio rich	-	• Injector leakage or blockage • Gas leakage from exhaust system • Ignition system • Fuel pressure • MAF meter • ECT sensor	A
Lean	Lean/Rich	A/F sensor malfunction	-	A/F sensor	B
Rich	Lean/Rich	A/F sensor malfunction	-	A/F sensor	B

Lean: During A/F CONTROL, A/F sensor output voltage (AFS) is consistently more than 3.35 V, and the HO2 sensor output voltage (O2S) is consistently less than 0.4 V.
Rich During A/F CONTROL, the AFS is consistently less than 3.0 V, and the O2S is consistently more than 0.55 V.

B → **Go to step 11**

C → **Go to step 15**

A

5 READ VALUE OF INTELLIGENT TESTER (COOLANT TEMP)

(a) Connect the intelligent tester to the DLC3.
(b) Turn the ignition switch to ON and turn the tester ON.

cardiagn.com

(c) Select the following menu items: DIAGNOSIS / ENHANCED OBD II / DATA LIST / ALL / COOLANT TEMP.

(d) Read the COOLANT TEMP twice, when the engine is cold and also when warmed up.

Standard:

With cold engine:

Same as ambient air temperature

With warm engine:

Between 75°C and 95°C (167°F and 203°F)

NG → **REPLACE ENGINE COOLANT TEMPERATURE SENSOR**

OK

6	READ VALUE OF INTELLIGENT TESTER (MAF)

(a) Connect the intelligent tester to the DLC3.

(b) Turn the ignition switch to ON and turn the tester ON.

(c) Select the following menu items: DIAGNOSIS / ENHANCED OBD II / DATA LIST / ALL / MAF and COOLANT TEMP.

(d) Allow the engine to idle until the COOLANT TEMP reaches 75°C (167°F) or more.

(e) Read the MAF with the engine in an idling condition and at an engine speed of 2,500 rpm.

Standard:

MAF while engine idling:

Between 1.4 g/sec. and 2.3 g/sec. (shift position: N, A/C: OFF).

MAF at engine speed of 2,500 rpm:

Between 5.4 g/sec. and 7.9 g/sec. (shift position: N, A/C: OFF).

NG → **REPLACE MASS AIR FLOW METER**

OK

7	CHECK FUEL PRESSURE

(a) Check the fuel pressure (See page FU-8).

NG → **REPAIR OR REPLACE FUEL SYSTEM**

OK

8	CHECK EXHAUST GAS LEAK

OK:

No gas leakage.

NG → **REPAIR OR REPLACE EXHAUST SYSTEM**

cardiagn.com

OK

9	CHECK SPARKS AND IGNITION

(a) Check for the sparks and the ignition (See page IG-3).
HINT:
If the spark plugs or ignition system malfunctions, engine misfire may occur. The misfire count can be read using an intelligent tester. Select the following menu items: DIAGNOSIS / ENHANCED OBD II / DATA LIST / ALL / CYL #1 (to CYL #4).

NG → **REPAIR OR REPLACE IGNITION SYSTEM**

ES

OK

10	INSPECT FUEL INJECTOR ASSEMBLY (INJECTION AND VOLUME)

(a) Inspect the fuel injector assembly (See page FU-13).
HINT:
If the injectors malfunction, engine misfire may occur. The misfire count can be read using an intelligent tester. Select the following menu items: DIAGNOSIS / ENHANCED OBD II / DATA LIST / ALL / CYL #1 (to CYL #4).

NG → **REPLACE FUEL INJECTOR ASSEMBLY**

OK

11	INSPECT AIR FUEL RATIO SENSOR (HEATER RESISTANCE)

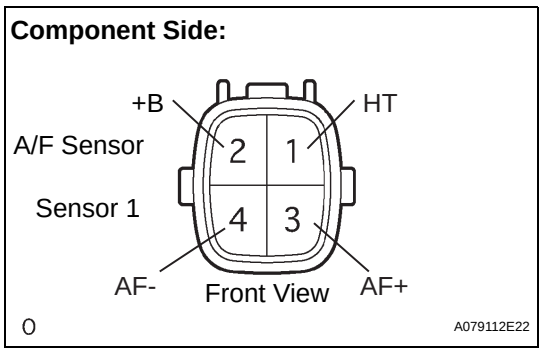

(a) Disconnect the A24 A/F sensor connector.
(b) Measure the resistance between the terminals of the A/F sensor connector.
Standard resistance

Tester Connections	Specified Conditions
HT (1) - +B (2)	Between 1.8 Ω and 3.4 Ω at 20°C (68°F)
HT (1) - AF- (4)	10 kΩ or higher

(c) Reconnect the A/F sensor connector.

NG → **REPLACE AIR FUEL RATIO SENSOR**

OK

cardiagn.com

12 INSPECT EFI RELAY

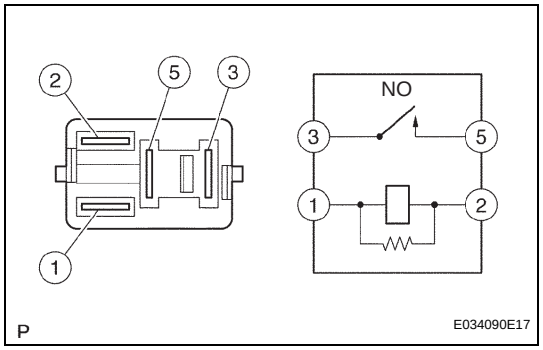

(a) Remove the EFI relay from the engine room R/B.
(b) Check the EFI relay resistance.
Standard resistance

Tester Connections	Specified Conditions
3 - 5	10 kΩ or higher
3 - 5	Below 1 Ω (When battery voltage applied to terminals 1 and 2)

(c) Reinstall the EFI relay.

NG → **REPLACE EFI RELAY**

OK

13 CHECK HARNESS AND CONNECTOR (A/F SENSOR - ECM)

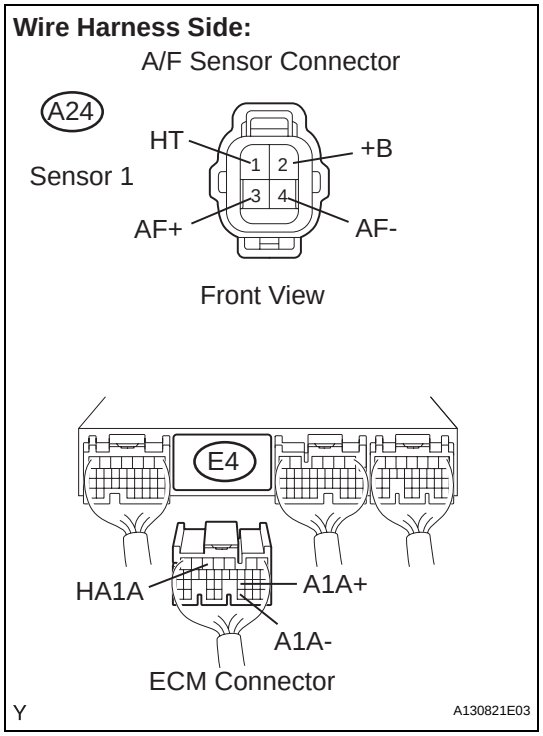

(a) Disconnect the A24 A/F sensor connector.
(b) Turn the ignition switch to ON.
(c) Measure the voltage between the +B terminal of the A/F sensor connector and body ground.
Standard voltage

Tester Connections	Specified Conditions
+B (A24-2) - Body ground	Between 9 V and 14 V

(d) Turn the ignition switch OFF.
(e) Disconnect the E4 ECM connector.
(f) Check the resistance.
Standard resistance (Check for open)

Tester Connections	Specified Conditions
HT (A24-1) - HA1A (E4-5)	Below 1 Ω
AF+ (A24-3) - A1A+ (E4-23)	Below 1 Ω
AF- (A24-4) - A1A- (E4-31)	Below 1 Ω

Standard resistance (Check for short)

Tester Connections	Specified Conditions
HT (A24-1) or HA1A (E4-5) - Body ground	10 kΩ or higher
AF+ (A24-3) or A1A+ (E4-23) - Body ground	10 kΩ or higher
AF- (A24-4) or A1A- (E4-31) - Body ground	10 kΩ or higher

(g) Reconnect the ECM connector.
(h) Reconnect the A/F sensor connector.

cardiagn.com

Reference (System Diagram of Sensor 1):

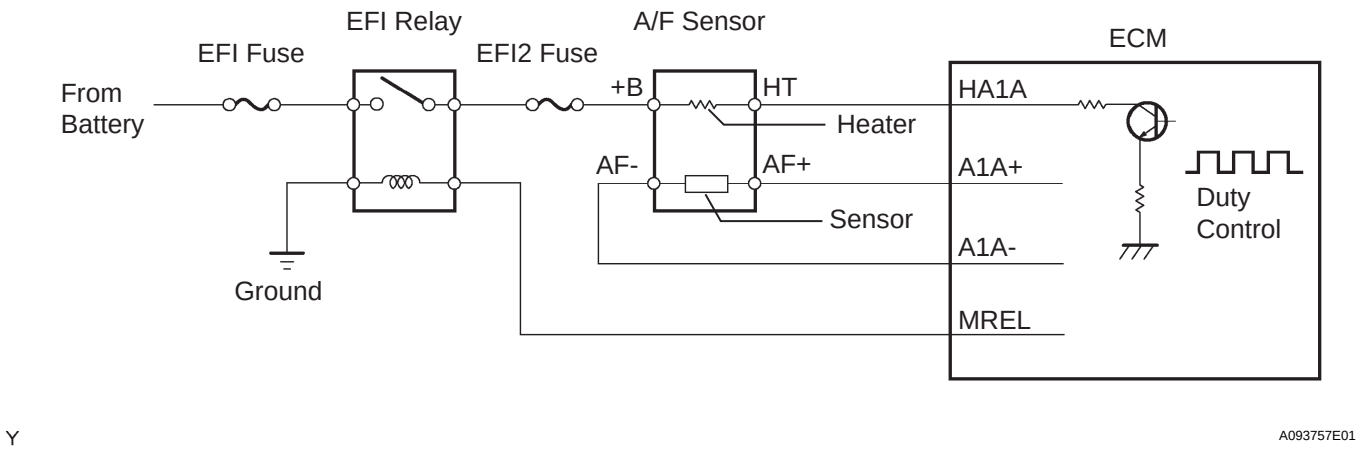

NG → **REPAIR OR REPLACE HARNESS OR CONNECTOR**

OK

14	REPLACE AIR FUEL RATIO SENSOR

NEXT

15	PERFORM CONFIRMATION DRIVING PATTERN

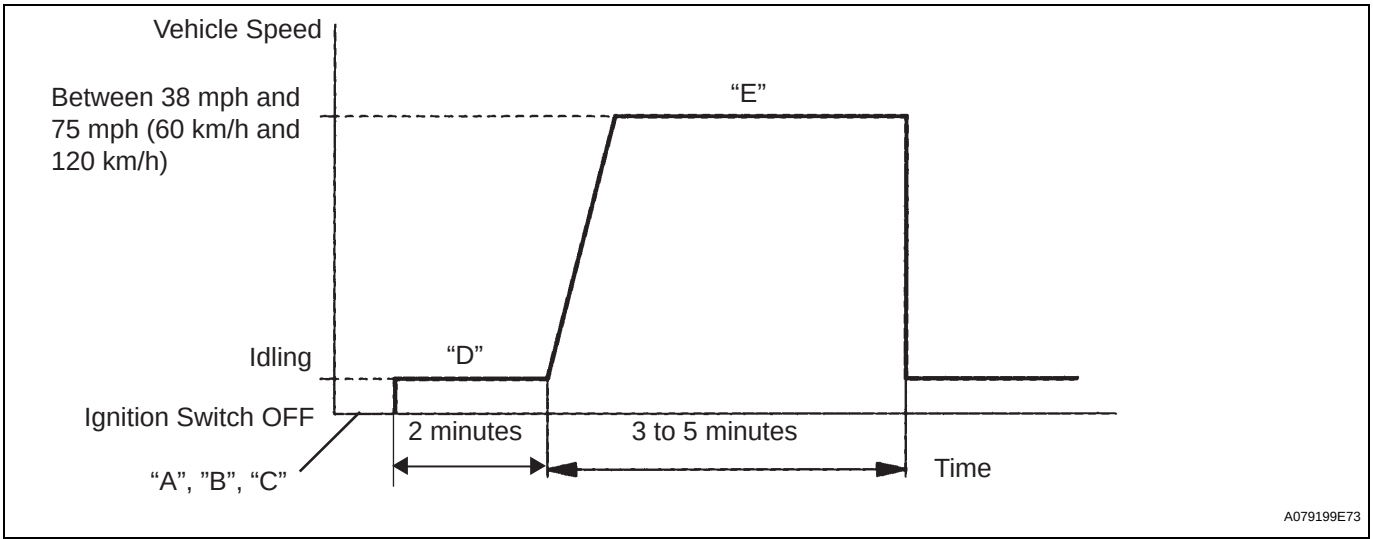

(a) Connect the intelligent tester to the DLC3 (Procedure "A").
(b) Turn the ignition switch to ON and turn the tester ON (Procedure "B").
(c) Clear DTCs (See page ES-30) (Procedure "C").
(d) Switch the ECM from normal mode to check mode using the tester (See page ES-31) (Procedure "D").

cardiagn.com

(e) Start the engine and warm it up with all accessories switched OFF (Procedure "E").

(f) Drive the vehicle at between 38 mph and 75 mph (60 km/h and 120 km/h) and at an engine speed of between 1,400 rpm and 3,200 rpm for 3 to 5 minutes (Procedure "F").
HINT:
If the system is still malfunctioning, the MIL will be illuminated during procedure "E".
NOTICE:
If the conditions in this test are not strictly followed, no malfunction will be detected.

NEXT

16	CHECK WHETHER DTC OUTPUT RECURS (DTC P0171 OR P0172)

(a) On the intelligent tester, select the following menu items: DIAGNOSIS / ENHANCED OBD II / DTC INFO / CURRENT CODES.

(b) Read DTCs.

Result

Display (DTC Output)	Proceed to
No output	A
P0171 or P0172	B

B → **Go to step 5**

A

END

When Using OBD II Scan Tool:

1	CHECK AIR INDUCTION SYSTEM

(a) Check the air induction system for vacuum leakage.
OK:
No leakage from air induction system.

NG → **REPAIR OR REPLACE AIR INDUCTION SYSTEM**

OK

2	CHECK PCV HOSE (CONNECTIONS)

OK:
PCV hose is connected correctly, and is not damaged.

NG → **REPAIR OR REPLACE PCV HOSE**

cardiagn.com

OK

3	INSPECT FUEL INJECTOR ASSEMBLY (INJECTION AND VOLUME)

(a) Check the injector injection (whether fuel volume is high or low, and whether injection pattern is poor).

NG → **REPLACE FUEL INJECTOR ASSEMBLY**

OK

ES

4	READ VALUE OF OBD II SCAN TOOL (COOLANT TEMP.)

(a) Connect an OBD ll scan tool to the DLC3.
(b) Turn the ignition switch to ON and turn the scan tool ON.
(c) Read the engine coolant temperature value using the scan tool twice, when the engine is cold and also warmed up.
Standard:
With cold engine:
Same as ambient air temperature.
With warm engine:
Between 75°Cnd 95°C (167°F and 203°F)

NG → **REPLACE ENGINE COOLANT TEMPERATURE SENSOR**

OK

5	READ VALUE OF OBD II SCAN TOOL (MAF)

(a) Connect the OBD ll scan tool to the DLC3.
(b) Turn the ignition switch to ON and turn the scan tool ON.
(c) Allow the engine to idle until the engine coolant temperature reaches 75°C (167°F).
(d) Read the mass air flow rate value with the engine in an idling condition and at an engine speed of 2,500 rpm.
Standard:
Mass air flow rate while engine idling:
Between 1.4 g/sec. and 2.3 g/sec. (shift position: N, A/C: OFF).
Mass air flow rate at engine speed of 2,500 rpm:
Between 5.4 g/sec. and 7.9 g/sec. (shift position: N, A/C: OFF).

NG → **REPLACE MASS AIR FLOW METER**

OK

6	CHECK FOR SPARKS AND IGNITION

(a) Check for the sparks and the ignition (See page IG-3).

cardiagn.com

OK:
Sparks occur.

NG → **REPAIR OR REPLACE IGNITION SYSTEM**

OK

7	CHECK FUEL PRESSURE

(a) Check the fuel pressure (See page FU-8).

NG → **REPAIR OR REPLACE FUEL SYSTEM**

OK

8	CHECK FOR EXHAUST GAS LEAK

OK:
No gas leakage.

NG → **REPAIR OR REPLACE EXHAUST GAS LEAKAGE POINT**

OK

9	READ VALUE OF OBD II SCAN TOOL (OUTPUT VOLTAGE OF A/F SENSOR)

(a) Connect the OBD II scan tool to the DLC3.
(b) Start the engine and turn the scan tool ON.
(c) Warm up the Air-Fuel Ratio (A/F) sensor at an engine speed of 2,500 rpm for 90 seconds.
(d) Using the scan tool, check the A/F sensor voltage three times, once when the engine is in each of the following conditions:
  (1) While idling (check for at least 30 seconds) (Step (1))
  (2) At an engine speed of approximately 2,500 rpm (without any sudden changes in engine speed) (Step (2))
  (3) Raise the engine speed to 4,000 rpm and then quickly release the accelerator pedal so that the throttle valve is fully closed (Step (3)).

Standard voltage

Conditions	A/F Sensor Voltage Variations	Reference
Steps (1) and (2)	Changes at approx. 0.66 V	Between 0.62 V and 0.7 V
Step (3)	Increases to 0.76 V or more	This occurs during engine deceleration (when fuel-cut performed)

For more information, see the diagrams below.

cardiagn.com

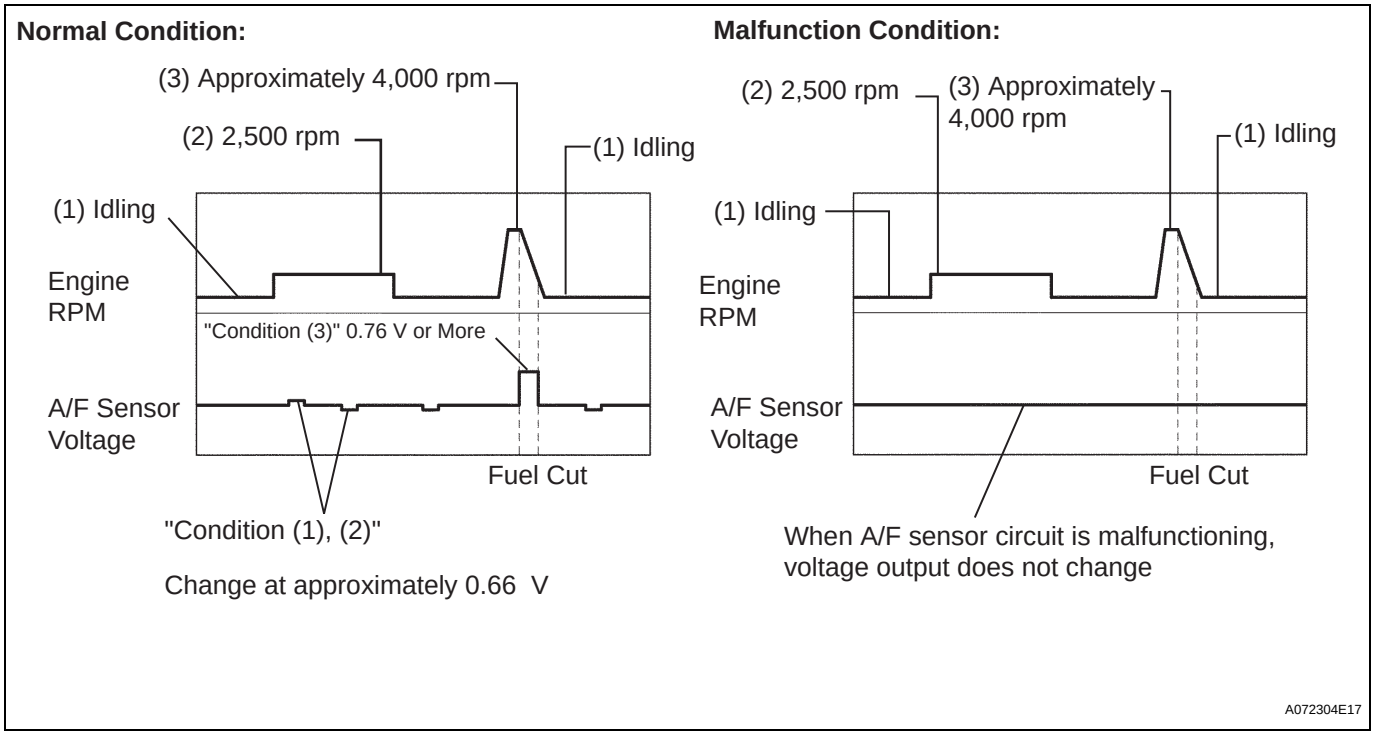

HINT:

- If the output voltage of the A/F sensor remains at approximately 0.66 V (see Malfunction Condition diagram) under any conditions, including those above, the A/F sensor may have an open circuit. (This will also happen if the A/F sensor heater has an open circuit.)
- If the output voltage of the A/F sensor remains at either approximately 0.76 V or more, or 0.56 V or less (see Malfunction Condition diagram) under any conditions, including those above, the A/F sensor may have a short circuit.
- The ECM stops fuel injection (fuel cut) during engine deceleration. This causes a lean condition and results in a momentary increase in the A/F sensor output voltage.
- The ECM must establish a closed throttle valve position learning value to perform fuel cut. If the battery terminal has been reconnected, the vehicle must be driven over 10 mph (16 km/h) to allow the ECM to learn the closed throttle valve position.
- When the vehicle is driven:
  The output voltage of the A/F sensor may be below 0.56 V during fuel enrichment. For the vehicle, this translates to a sudden increase in speed with the accelerator pedal fully depressed when trying to overtake another vehicle. The A/F sensor is functioning normally.

cardiagn.com

- The A/F sensor is a current output element; therefore, the current is converted into a voltage inside the ECM. Measuring the voltage at the connectors of the A/F sensor or ECM will show a constant voltage result.

NG → **Go to step 16**

OK

10	PERFORM CONFIRMATION DRIVING PATTERN

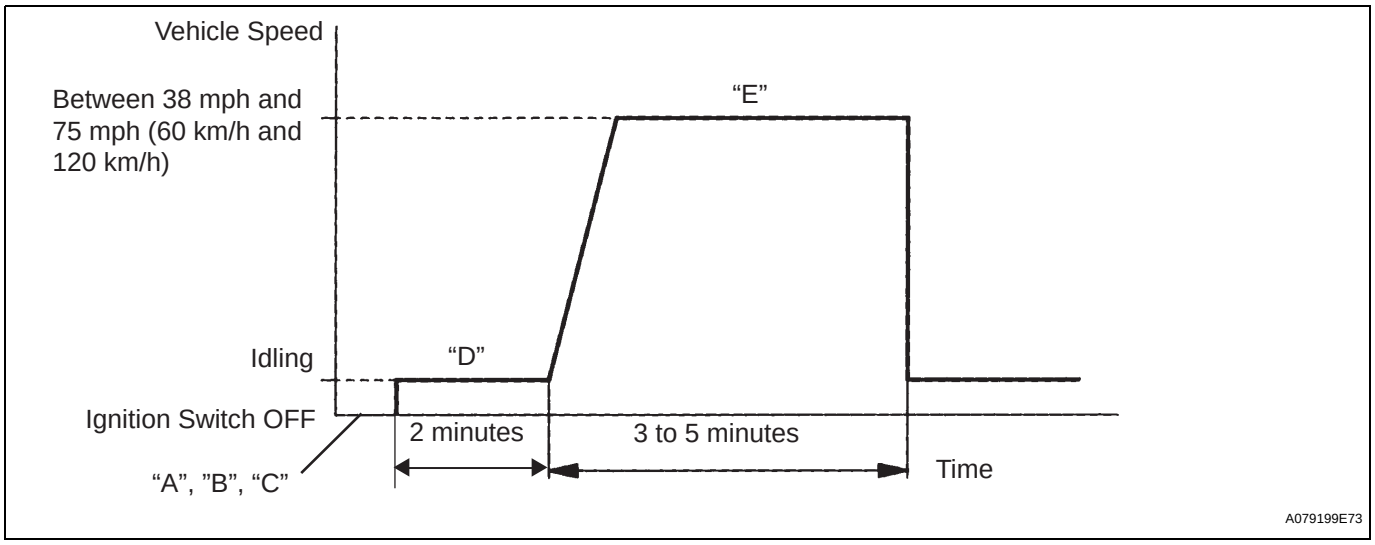

(a) Connect the OBD II scan tool to the DLC3 (Procedure "A").
(b) Turn the ignition switch to ON and turn the scan tool ON (Procedure "B").
(c) Clear DTCs (See page ES-30) (Procedure "C").
(d) Start the engine and warm it up for 2 minutes with all the accessories switched OFF (Procedure "D").
(e) Drive the vehicle at between 38 mph and 75 mph (60 km/h and 120 km/h) and at an engine speed of between 1,400 rpm and 3,200 rpm for 3 to 5 minutes (Procedure "E").
(f) Turn the ignition switch to OFF (Procedure "F").
(g) Repeat procedures "D" and "E" described above (Procedure "G").
(h) Go to the next step (Procedure "H")
HINT:
The MIL will be illuminated during procedure "E" at the second time if a malfunction still exists.
NOTICE:
- **If conditions in this test are not strictly followed, no malfunction will be detected.**

NEXT

cardiagn.com

11	CHECK WHETHER DTC OUTPUT RECURS (DTC P0171 OR P0172)

(a) Read DTCs using the OBD II scan tool.

Result

Display (DTC Output)	Proceed to
P0171 or P0172	A
No output	B

B → **Go to step 15**

A

ES

12	REPLACE AIR FUEL RATIO SENSOR

(a) Replace the air-fuel ratio sensor.

NEXT

13	PERFORM CONFIRMATION DRIVING PATTERN (REFER TO STEP 10)

NEXT

14	CHECK WHETHER DTC OUTPUT RECURS (DTC P0171 OR P0172)

(a) Read DTCs using the OBD II scan tool.

Result

Display (DTC Output)	Proceed to
No output	A
P0171 or P0172	B

NOTICE:
After replacing the ECM, perform confirmation driving pattern (refer to step 10).

B → **REPLACE ECM**

A

15	CONFIRM IF VEHICLE HAS RUN OUT OF FUEL IN PAST

NO → **CHECK INTERMITTENT PROBLEMS**

YES

DTC CAUSED BY RUNNING OUT OF FUEL (DTC P0171 OR P0172)

cardiagn.com

16 INSPECT AIR FUEL RATIO SENSOR (HEATER RESISTANCE)

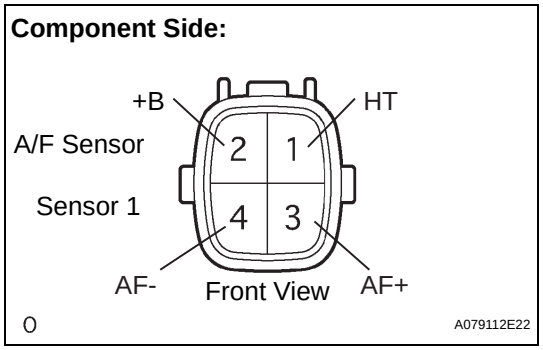

(a) Disconnect the A24 A/F sensor connector.
(b) Measure the resistance between the terminals of the A/F sensor connector.
Standard resistance

Tester Connections	Specified Conditions
HT (1) - +B (2)	Between 1.8 Ω and 3.4 Ω at 20°C (68°F)
HT (1) - AF- (4)	10 kΩ or higher

(c) Reconnect the A/F sensor connector.

NG → **REPLACE AIR FUEL RATIO SENSOR**

OK

17 INSPECT EFI RELAY

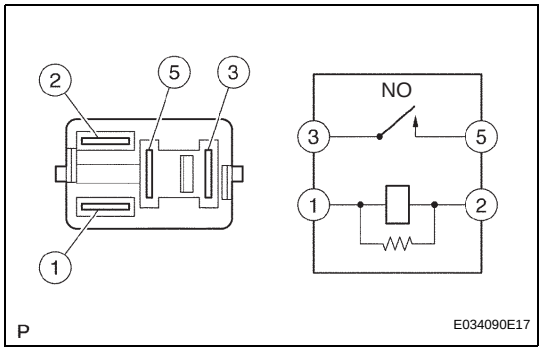

(a) Remove the EFI relay from the engine room R/B.
(b) Check the EFI relay resistance.
Standard resistance

Tester Connections	Specified Conditions
3 - 5	10 kΩ or higher
3 - 5	Below 1 Ω (When battery voltage applied to terminals 1 and 2)

(c) Reinstall the EFI relay.

NG → **REPLACE EFI RELAY**

OK

ES

cardiagn.com

18 CHECK HARNESS AND CONNECTOR (A/F SENSOR - ECM)

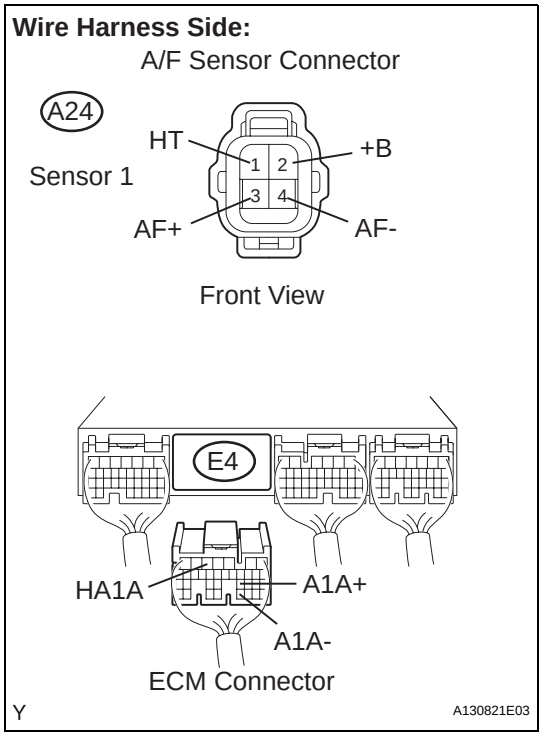

(a) Disconnect the A24 A/F sensor connector.
(b) Turn the ignition switch to ON.
(c) Measure the voltage between the +B terminal of the A/F sensor connector and body ground.

Standard voltage

Tester Connections	Specified Conditions
+B (A24-2) - Body ground	Between 9 V and 14 V

(d) Turn the ignition switch OFF.
(e) Disconnect the E4 ECM connector.
(f) Check the resistance.

Standard resistance (Check for open)

Tester Connections	Specified Conditions
HT (A24-1) - HA1A (E4-5)	Below 1 Ω
AF+ (A24-3) - A1A+ (E4-23)	Below 1 Ω
AF- (A24-4) - A1A- (E4-31)	Below 1 Ω

Standard resistance (Check for short)

Tester Connections	Specified Conditions
HT (A24-1) or HA1A (E4-5) - Body ground	10 kΩ or higher
AF+ (A24-3) or A1A+ (E4-23) - Body ground	10 kΩ or higher
AF- (A24-4) or A1A- (E4-31) - Body ground	10 kΩ or higher

(g) Reconnect the ECM connector.
(h) Reconnect the A/F sensor connector.

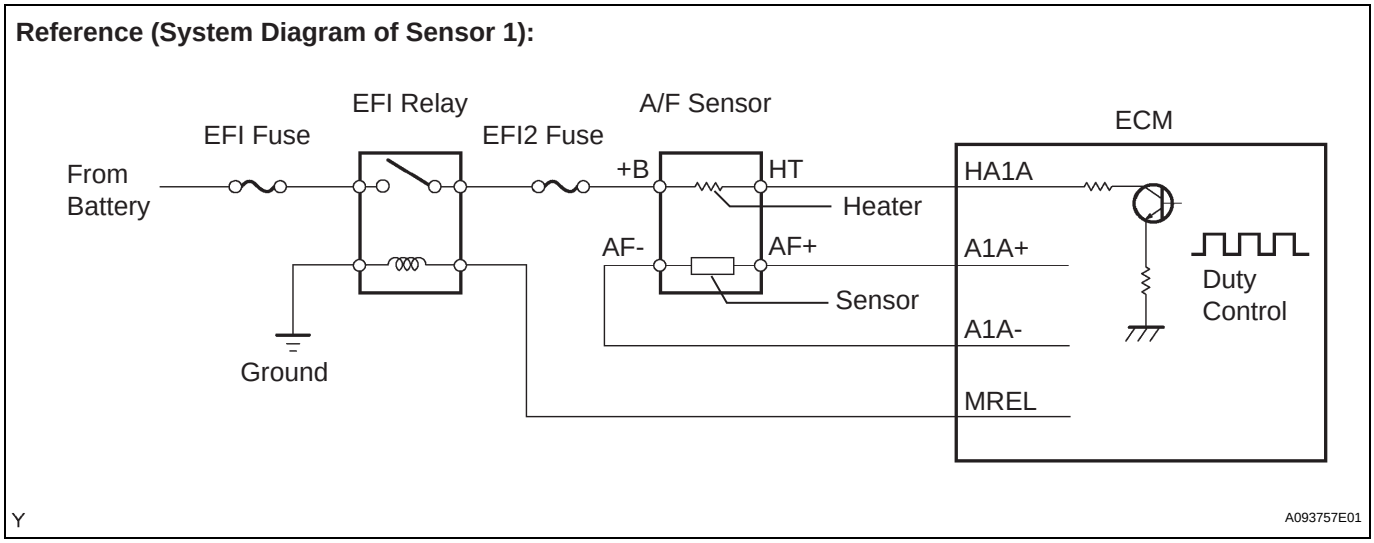

NG → **REPAIR OR REPLACE HARNESS OR CONNECTOR**

OK

19 REPLACE AIR FUEL RATIO SENSOR

(a) Replace the air-fuel ratio sensor.

cardiagn.com

NEXT

20	PERFORM CONFIRMATION DRIVING PATTERN (REFER TO STEP 10)

NEXT

21	CHECK WHETHER DTC OUTPUT RECURS (DTC P0171 OR P0172)

(a) Read DTCs using the OBD II scan tool.

Result

Display (DTC Output)	Proceed to
No output	A
P0171 or P0172	B

NOTICE:
When replacing the ECM, perform confirmation driving pattern (refer to step 10).

B → **REPLACE ECM**

A

22	CONFIRM IF VEHICLE HAS RUN OUT OF FUEL IN PAST

NO → **CHECK FOR INTERMITTENT PROBLEMS**

YES

DTC CAUSED BY RUNNING OUT OF FUEL (DTC P0171 OR P0172)

ES

cardiagn.com